CEMLINE CORPORATION
P.O. Box 55
Cheswick, Pennsylvania 15024

724-274-5430
Fax: 724-274-5448

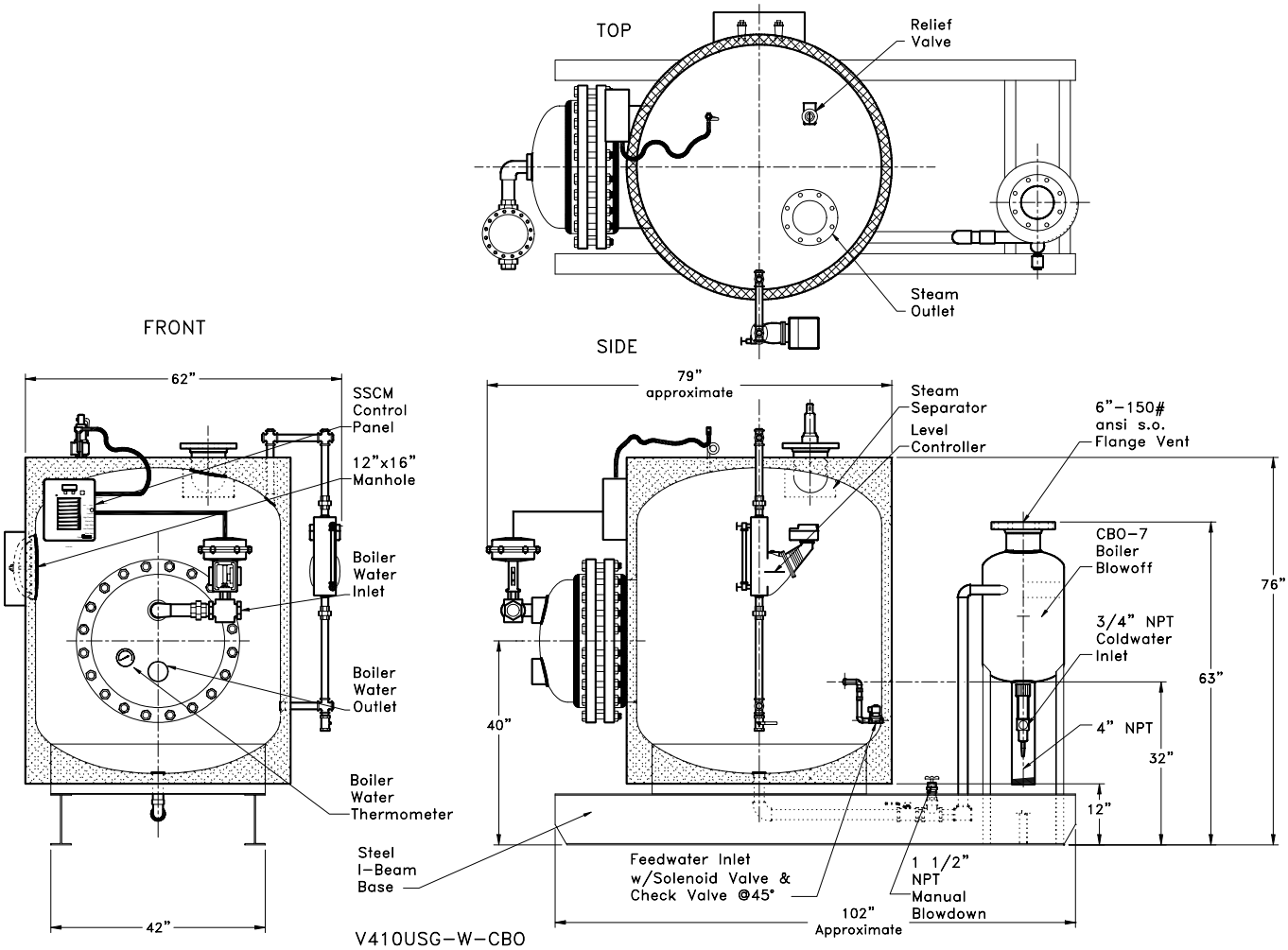

V410USG-W-CBO
Energy Source-Boiler Water