CEMLINE CORPORATION
P.O. Box 55
Cheswick, Pennsylvania 15024

724-274-5430
Fax: 724-274-5448

TOP

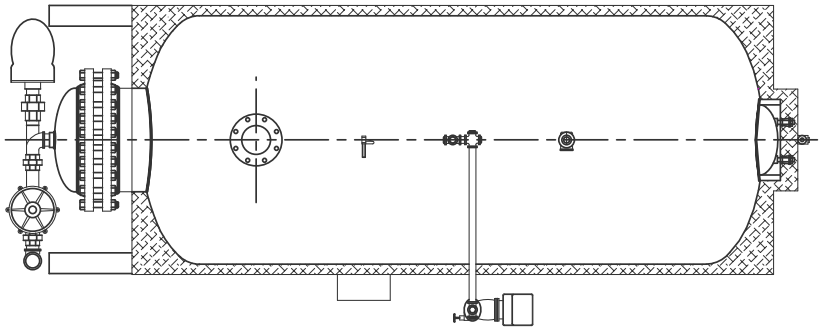

SIDE

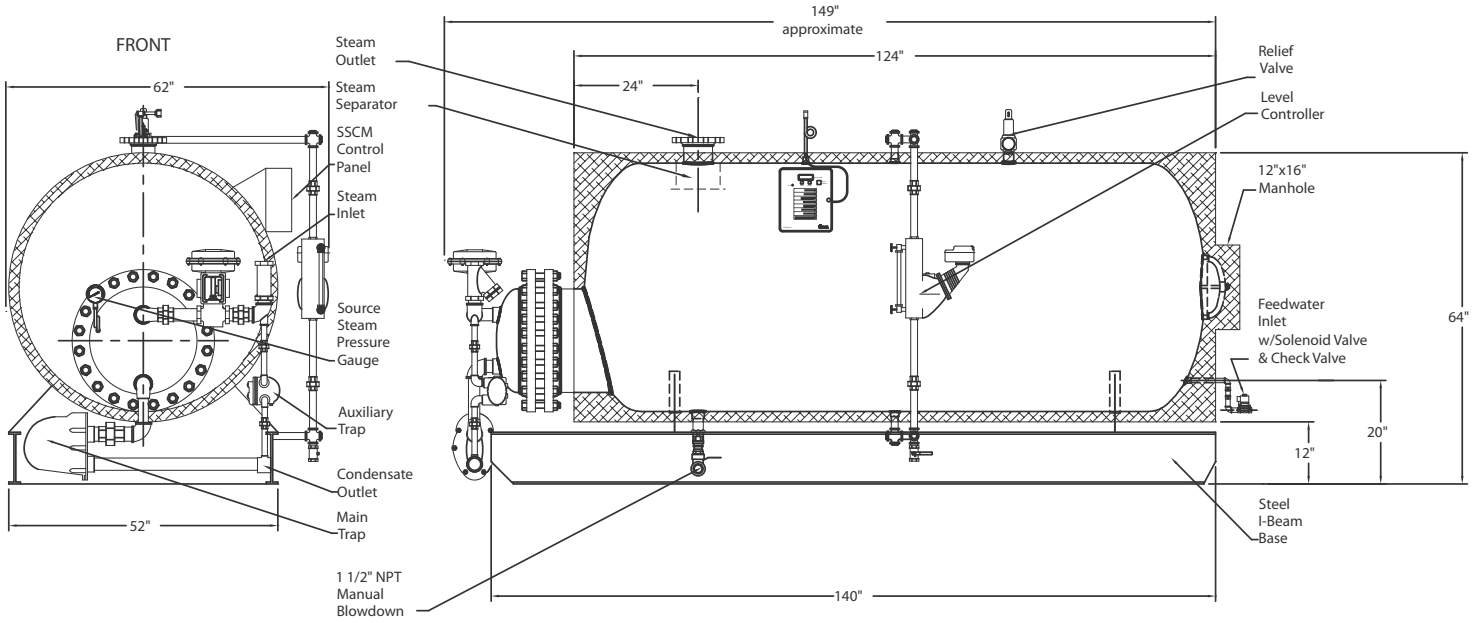

H860USG20XX
Energy Source-Steam